Servicing the D-Series

The routine checks which should form an essential part of any service may well indicate the need for more detailed attention in a particular area. However, the service information is intended to be complete in itself, and I shall approach this in terms of service intervals.

Servicing on D series is arranged in 3.000 mile increments. and is cumulative, so that additional tasks are carried out every 6.000 miles, also every 12.000 and finally every 18,000 miles. the latter being the most extensive scheduled service. The 3,000 mile interval is not an indication of Imperial inclinations within Citroen, incidentally; it equates approximately to 5.000 kilometres, but as you are not all fully metricated.

In the case of a recently acquired ear without a consistent - and recent service history, it makes sense to work through a complete major service schedule as rapidly as time and money allows: however, other things being equal, the most frequently serviced items should obviously receive attention first. In any case, it's an ideal way to familiarize yourself with the peculiarities of D series engineering!

EVERY 3,000 MILES:

Drain the engine oil and refill - the capacity is 8 pints (plus 1 pint when the filter is changed at 6,000 miles. The engine should be fully warmed up before draining, to ensure that all the contaminants are held in suspension, and to promote more complete draining.

The oil originally specified was a 20 W 50 multigrade, and whilst it is tempting to assume that a modern general purpose multigrade will do the job, this is not necessarily the case. Assuming a reputable brand of oil, the problem lies not with the quality, but with the viscosity. Many modern oils are rated as 15 W 40, 1OW 40 or even 5 W 50, particularly in the case of semi- or fully synthetic lubricants. These are ideal for modern turbocharged multivalve overhead camshaft engines, but in crude terms are simply too thin for older designs such as the D unit. (No tractor comparisons thank you - this engine was modern in 1965, and served until 1989 in the CX!)

The use of these oils in a D - particularly as most have now covered moderately high mileages and a degree of normal engine wear has resulted in increased clearances - will tend to increase oil consumption and visible smoke: the engine may well seem appreciably 'noisier'. The solution is obvious - use only 20 W 50 viscosity oil! Fortunately, there are reputable alternatives to the cheap supermarket/ accessory shop type oils which, whilst nominally rated 20 W 50, may well degrade rapidly in use, and frequently have a wholesale cost of less than £1 per gallon - which is less than the reputable oil companies pay for their base stock!

Lubrication technology has moved on from the days of necessarily separate oils for petrol and diesel engines, and there are now `mixed-fleet' oils available, primarily aimed at the commercial user. These exist in the correct viscosity for the D; an alternative is the 'classic car' oil specifically intended for the enthusiast. If your local supplier cannot assist, both Total (011977 636200) and Millers Oils (011484 713201) produce suitable oils and are willing to advise.

Oil is best changed on a time and mileage basis, and as many Ds now cover only a small annual mileage. I recommend the original 3.000 mile intervals. Remove any metallic particles from the drain plug before refitting, ideally renew the copper washer and do not over-tighten the plug in the aluminium sump! (32-36 lbs/ft).

One indication of the D's age (!) is the absence of sealed-for life steering and suspension joints, which leaves you with six, sometimes seven greasing points on each side of the car. These all use a multi-purpose lithium-base grease such as Castrol LM or Moly, and each requires about three strokes of the grease gun. Multi-purpose greases are compatible with each other so long as they are lithium based, as most are; avoid calcium/ lime-based waterproof greases as they interact with the former, resulting in liquefaction.

There are two grease nipples behind rubber plugs in the front wheelarch (accessible with the car on `high' and full lock; remember to provide support in case the suspension settles!) the top one is for the upper suspension arm bearings, the lower one for the anti-roll bar. The upper and lower steering swivel joints have a grease nipple each—grease only sufficiently to swell the rubber gaiters slightly; if over-enthusiastic greasing has previously displaced the boots, the excess grease must be removed and the lip of the boot refitted into the machined groove.

There is a grease point on the drive-shaft, and - the one which is frequently missed - one upwards behind a plug in the triangular cover plate on the underside, inboard of the wheelarch, serving the lower suspension arm bearings.

The seventh - if fitted - is on the steering track rod.

Replace all the rubber plugs after greasing to ensure that the grease points are not covered in abrasive road dirt 3,000 miles later on!

There are no greasing points at the rear of the car, but you should lubricate the suspension pushrod ball seatings - at the forward end of the pushrods - by inserting an oil can into the rubber dust covers. The cup seating for the ball-end of the pushrod is retained in the cast suspension knuckle by means of a spring steel wire clip: this tends to seize in place, so remove and thoroughly grease it if possible.

Save only for checking the battery electrolyte level (distilled water only) which of course you check for more frequently anyway, that concludes the 3000 mile service!

It is worthwhile checking the security of the battery mountings, because the steel cage-frame' has been known to short out the battery terminals if incorrectly fitted, with predictable results.

The thick LHM tube from the top of the reservoir must also be correctly located - and protected by a grommet - where it crosses the battery cage.

Ensure that the cage mounting bolts do not protrude. or you will dent the bonnet from underneath! For some strange reason, a coolant check is not specified, but the radiator level should be checked when cold and topped up if necessary with an ethylene-glycol based antifreeze such as Bluecol, in a 25% solution. Keep antifreeze in the system permanently, as its anti-corrosive properties are always needed, and avoid the cheap methanol-based liquids - the antifreeze evaporates off, and creates a fire risk in doing so. Lastly. tyre pressures should be 20 psi front in all cases. 26 psi rear (saloons) and 32 psi rear (Safaris). Strictly speaking, this applies only to the original equipment Michelins, but is a valid guide for other makes unless specifically noted otherwise. Next installment - the 6.000 mile service.

NIGEL WILD

From "D-Info Special, "The Citroenian", May 2000

talkingtechnical

part 2 of
The SERVICEABLE 'D'

The Serviceable `D' Part 2, by Nigel Wild

To continue with the re-examination of the servicing requirements for the D series, let us move on to the 6,000 mile service. Just to spoil your day before we start, remember that because servicing tasks are cumulative, the following is in addition to - and not instead of - the jobs outlined in the 3,000 mile service. Moreover, if you are working on a recently-acquired car with an uncertain service history, you should aim to carry out a full service of all items - normally every 36000 miles - as soon as possible, even if you do this by stages.

EVERY 6,000 MILES:

In addition to an engine oil change, renew the oil filter cartridge. The arrangement is a fine example of traditional Citroen engineering design - that is, it is a technical, elegant and functionally thorough solution of a problem, but not with cheap manufacture or maintenance in mind. Thus, instead of an external oil cartridge, this is fitted inside the sump, above a circular cover plate. Removal of the plate - unbolt it. and then prise evenly and gently all around the edge - reveals the oil-pump strainer assembly, held by a single central bolt. After removal, clean the assembly in petrol, renew the filter element and refit the assembly, ensuring that the sealing washers are accounted for and are not left in the housing to be drawn into the oil feed! When refitting, the two red triangles, one on the strainer and the on the sump (cast on near the drain plug) must face each other; this is vital to ensure correct oil flow. Holding the assembly in place. refit the centre bolt by hand. ensuring that it is vertical - if not, it is likely to be between the boss and the filter element rather than in the tapped hole. Ensure also that the assembly cover cannot turn - if it does, it is incorrectly fitted - and tighten the centre bolt. Having removed any traces of gasket or sealant from the sump and cover plate, refit the cover plate with a new gasket, using no sealant. If there were signs of leakage from the old gasket, it is worth checking the plate for distortion around the bolt holes caused by previous overtightening; if so, correct this carefully with a hammer and flat punch.

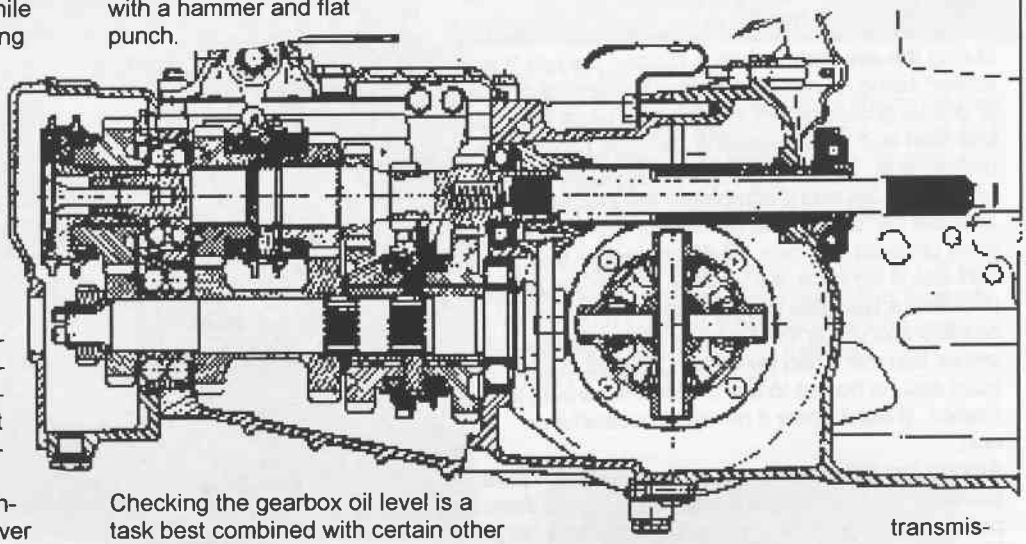

Checking the gearbox oil level is a task best combined with certain other jobs, as it involves removal of the air intake duct. With the spare wheel out, unbolt the headlamp levelling tube (mark its lateral position first) and the front crossbar, unhook the headlamp steering cable and levelling linkages, and remove the bolts down each side of the radiator. You can then lift away the duct and crossbar complete, to reveal the gearbox and brake calipers. The combined filler and level plug is low down on the right-hand side of the gearbox; on five-speed boxes there are two drain plugs - the second on the fifth speed casing, mounted on the front ot the main box. Top with a good-quality EP8O oil - EP refers to `extreme pressure', which is necessitated by the differential gears being incorporated within the main gearbox.

Alternatively, should you happen to possess one of the rare fully-automatic DSs fitted with the Borg Warner transmission, this uses ATF whilst the differential requires EP80. However, as the gearbox input shaft passes through the differential casing, there is a tendency for seal failure to allow internal leakage - and EP80 does not suit the transmission any more than the differential will run on ATF! The 'unofficial' remedy is to drain, flush and then refill both sections of the gearbox with Total 'Fluid T' which is considered to be suitable for both purposes. Exactly the same applies to the automatic SM, and these are more numerous in the UK than the antomatic DS.

While you have access to the gearbox, check the condition of the brake pads: although the warning wires should indicate imminent demise, these do break or fall off, or contact the disc causing premature wear indications! Why not disconnect all four and `earth' each one in turn with the ignition on (be careful!) to check that they actually operate the dashboard warning light? If the pads need replacing, fit for preference original

equipment such as Ferodo or Textar; this will be expensive, but although cheaper alternatives are available, there is a significant possibility that these may cause excessive disc wear in the longer term - and disc replacement is expensive! With the current requirement for all brake materials to be asbestos free, the friction characteristics have tended to change - but frequent disc replacement is routine (and easy) on current Citroens.

Confirm with the supplier that the pads are appropriate for your particular D; between July and September 1973 the caliper pistons were changed from the steel ones used previously to aluminium until production ended. Cars with the later pistons must be fitted only with brake pads having a full circle of reinforcement on the aluminium backplate; use of the earlier type with only a partial circle will result in distortion of the caliper pistons. The later pads may be safely used in the earlier type calipers, however.

When replacing the pads, remove only one at a time. levering gently against the edge of the disc and the pad face (the pad is scrap. but gouges on the disc face will remain). Use a smooth, fiat lever, and allow time for the fluid to flow back; you will need to fully retract the piston, and a thin wood packtng against the disc may help, Do not lever directly on the piston with the pad removed! Ensure that the sliding faces are clean; a little copper grease on the back of the pad helps to avoid brake squeal.

Finally, having refitted the wire retaining clip, apply the brakes to set the pads and avoid the embarrassing delay when you first move the car! Peer suspiciously at the handbrake pads: if worn, these are not easy to replace - and will have to be covered later! Clean the radiator fins before refitting the air duct; although the half moon zip on the fabric part allows you to do this, it is easier with the duct removed.

Apart from checking the LHM level on the sight tube on the tank - it must he between the MAX and MIN marks with the car at maximum height - pause to consider the colour of the fluid. As a rough guide, anything other than bright green indicates contamination and the need to change the fluid. In any case, it is time to clean the filter.

Unclip the white cap at the end of the thick feed pipe and lift the filter assembly out; the filter cone may then be withdrawn from the outer tube. Clean the filter carefully in petrol only - it may well look clean to start with - and if possible use compressed air to blow through it from the outside of the cone. When refitting, ensure that the clip and pipe are correctly located: the grommet and fork for the pipe on the battery cage pass very close to the bonnet, and incorrect fitment can damage both bonnet and pipe!

Both pairs of drive belts need to be examined for condition and correct tension: if only one of a pair is worn or frayed. you must replace both to maintain an even tension.

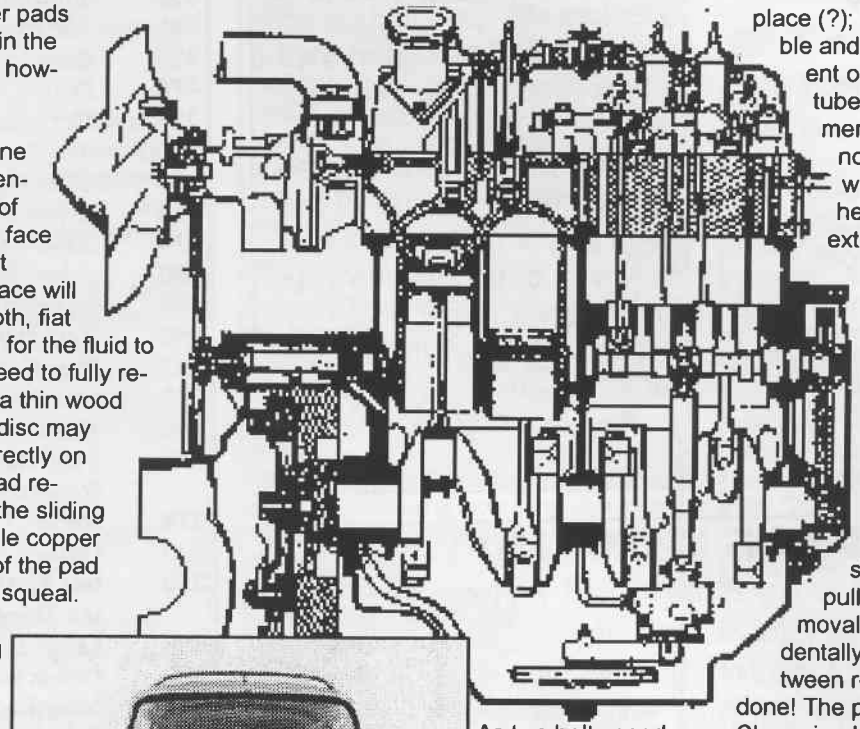

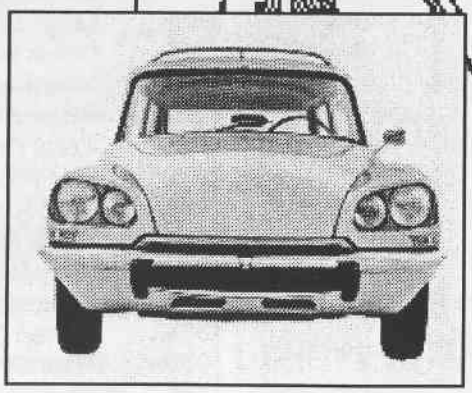

As two belts need to be removed to replace the other two, if this is the case you may consider it worthwhile to change all four in the interests of long term durability. Correct belt tension should allow about half an inch of deflection on the `long' side between pulleys; screeching indicates insufficient tension or worn belts 'bottoming' in the pulley grooves. Incidentally, you won't regard the apparent over-engineering of twin belts as an extravagance if you ever return home after a long journey to to find that one belt has broken without even being noticed! (definitely not possible with the CX). Kleber Ventriflex belts are original equipment and any replacements should be of similar quality.

You will need a long box spanner to remove the spark plugs, and the fourth is accessible through a hole at the base of the windscreen surround, normally sealed by a rubber bung. Don`t forget to refit this, otherwise the first wet day will see your D running on three cylinders! Each plug has an extension rod screwed onto the terminal in place of the standard cap, and should have a fibre insulating sleeve to prevent arcing between the rod and the metal tube around it. Any burning. cracking or erosion of the sleeve indicates that it should be replaced; it is amazing how an apparently sound sleeve can allow arcing to cause a misfire! If in doubt, slide the grey top caps back along the leads and run the engine in a dark place (?); any arcing should be audible and will be immediately apparent on looking down the plug tube. Be careful - claims from members with electrocuted noses (or other extremities) will not be entertained! Don't he tempted to unscrew the extension rod from the plug to permit the use of a normal plug socket - having refitted the plug you will find that it is practically impossible to align the rod with the plug top and screw it on - and even harder to retrieve it when dropped down the tube! Ensure that the HT leads are an adequate clip fit onto the extension rods (not so tight as to pull the lead apart upon removal!) and that you do not accidentally wedge the terminal between rod and sleeve - it's easily done! The plugs must be NGK BP6HS. Champion L87YC or equivalent, gapped to 0.6mm/0.O24in.

The final item of the 6,000 mile service consists of a clutch adjustment check and linkage lubrication. As the procedure for manual and semi automatic transmission cars obviously differ completely, I shall leave these for now and deal with both in full in the next installment!

I'll aim for a little variety next month - always remember that this column aims to reflect your needs, and to disseminate (they can't touch you for it) your contributions, so these are always welcome!

Reprinted from "The Citroenian" June 2000 with thanks.

part 3 of

The SERVICEABLE 'D'

The Serviceable `D' -part 3

In concluding the previous article I noted that the final item of the 6,000 mile service consists of a clutch adjustment check, and I shall now deal with this procedure for both manual and semi-automatic transmission cars. On the latter, clutch adjustment should be carried out only as part of a sequence of checks, whereas on a manual car the job is relatively straightforward, so I shall commence with this!

The arrangement of the clutch pedal on a manual D is perhaps less than ideal; the pedal travel is long and the release pressure fairly high. To lessen these inconveniences Citroen modified the clutch control to incorporate an overcentre spring and this was fitted to all manual cars produced after September 1968. This spring functions to reduce the pressure needed to keep the pedal depressed; the snag is that its setting is critical and if incorrect makes the clutch even heavier! The following includes all the initial adjustments of the clutch control which, once set, need only be checked occasionally; normal clutch adjustment is explained, and this is usually all that required periodic resetting. It is worth checking all the settings once to start with! The cable layout naturally varies between LHD and RHD cars; the latter incorporates a rather more tortuous bell crank lever, and maladjustment can place excessive loads on a component which is already known to fatigue after many years use!

The basic adjustment method remains the same: work through the procedure in the order given,

1. Adjust the height of the clutch pedal. This is done using the screw and locknut on the pedal bracket directly over the pedal. The height must be 142mm (within 5mm) from the underside of the pedal plate (rubber pad removed) to the floor panel - on Pallas versions, 137mm (rubber pad left in place).

2. Adjust the length of/he cable sheath. The fixed outer sheath of the clutch cable runs from the bulkhead to an adjusting sleeve threaded in a small cast projection on the clutch housing. The cable itself is connected to a pivoted bell crank (L'-shaped lever) which actuates the clutch release fork via a pushrod. The end of the pushrod nearest the engine almost touches the clutch housing when the pedal is released; all clearances mentioned from now on relate to the distance between the pushrod and the housing. The best way to measure the various clearances required is to make up some short lengths of steel of the appropriate thickness.

Alternatively, measure the jaw thickness of some open-ended spanners (and they don't have to be metric!) The length of the cable sheath should be adjusted using the threaded sleeve on the clutch housing until the pushrod clearance described above is between 3 and 4mm.

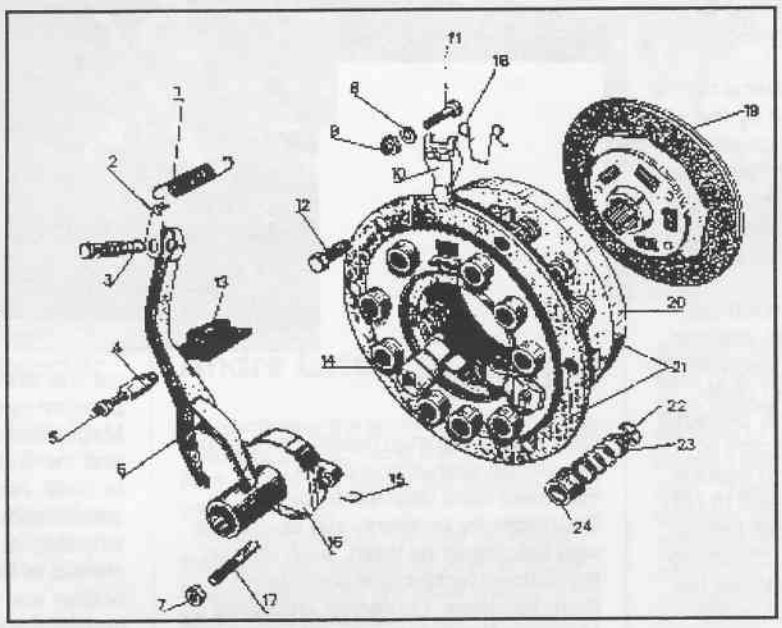

3. Adjust the overcentre spring. Depress the clutch pedal and insert a spacer 9mm thick between the pushrod and the housing. (This prevents the cable pulling on the pedal). When released, the pedal should return fully due to the action of the spring. If the pedal does not return fully, the overcentre spring (the heavy coil spring mounted vertically near the pedal arm) should be adjusted by screwing the lower mounting point in or out. Do not unscrew this bolt too far - the maximum distance from bolt head to bracket must not exceed 33mm. The aim is to achieve a setting at which the pedal just returns. but it must return consistently. If the required setting is just beyond the range of the bolt, bend the bracket carrying the top of the spring slightly in or out as necessary, It's inelegant but intentional! It is beneficial to have an assistant holding the spacer in place because the pedal needs to be fully depressed and fairly gently released several times whenever an adjustment is made, in order to overcome friction in the linkage, and give more positive results.

The next step is to replace the 9mm spacer with one of 10.2mm. If the setting is correct, the pedal will now just not return through the final part of its travel, instead of just returning as before. Re-adjust the spring if necessary (and it will be!) into a position that gives the desired results; however, the setting is very critical.

4 Adjust the clutch clearance.

Check the pushrod clearance: it needs to be 3-4mm, but at this stage you want to know what it actually is. (Find a spanner that fits the gap and measure it using callipers.) With your assistant depressing the clutch pedal by hand to the point where all the free play has been taken up and the thrust bearing is in contact with the release toggles, check the pushrod clearance again. The difference between the two measurements should be 1.6 to 2.4mm; if not, adjust the bolt on the clutch release fork (i.e. at the gearbox end of the pushrod.) ensure that the bolt doesn't touch the steering rack bellows with the clutch fully depressed. It is worthwhile rapidly re-checking all the settings once the job is complete to confirm that all is well!

By contrast. clutch adjustment on a semi-automatic D is carried out entirely differently. This is despite the fact that the entire gearbox and clutch assemblies are identical to those of a (four-speed) manual car, the only differences being the hydraulically-actuated gear selectors and clutch slave cylinder. As previously mentioned, there is a sequence of checks which must be car-

ried out completely and in order.
1 Adjust the clutch clearance.
With the engine thoroughly warmed up, fit the starting handle extension (you will probably need to remove the front number plate!), passing it through the air duct and engaging it in the gearbox. Once engaged, the extension must be pushed in about an inch; at this point, it rotates when the clutch is engaged (and is thus able to be used for starting the car manually!) Run the engine at idling speed; the clutch release fork should be fully forward, which corresponds to the clutch being fully disengaged. On a semi-automatic D, the clutch is disengaged whenever the car is not being driven, and remains so even when parked. Unscrew the bolt on the clutch release lock (anti-clockwise) by fractions of a turn, until the extension just begins to turn but may be stopped by hand. Tighten the bolt by two turns; the clutch is now correctly set. If the extension continues to rotate even with the bolt screwed fully in, this indicates failure of the pressure plate and the need to replace the clutch; in this case, further adjustments are useless.
2. Check the clutch clearance.
Ensure that the release spring on the fork is intact and correctly fitted. Release the pressure in the clutch slave cylinder by means of the auxiliary clutch control lever below the dashboard (so that's what it's for!) Check that the fork is no longer under any load, if not, reset the lever and re-adjust the clutch clearance, which has probably been overdone.
3. Adjust the idling speed.
Screw in fully, without forcing, the large accelerated idling adjustment screw; this is located at the front bottom left of the carburettor. The engine should slow to idle, and this needs to be about 650 rpm, The engine must idle smoothly at this speed, because this is equivalent to the car being stationary with the footbrake applied. Obtain this speed by adjusting the mixture screw (angled upwards halfway along the left-hand base of the carb.) and either the secondary throttle butterfly stop screw (facing left, on rear of the carb.) or, if this is locknutted, use the other mixture screw angled upwards on the side of the carb. facing the rocker cover.) the car's own tachometer is not really accurate enough for this work: also, the use of a gas analyser is the only reliable way to set the mixture accurately, even though the idling speed may seem acceptable. The original figures are: CO - 2 to 3.6%; CO2 - above 8%. Do not attempt to adjust the throttle butterfly stop screws where these are locknutted, as on later cars. If the hydraulic pump cuts in during adjustment, wait for it to cut out before taking readings.

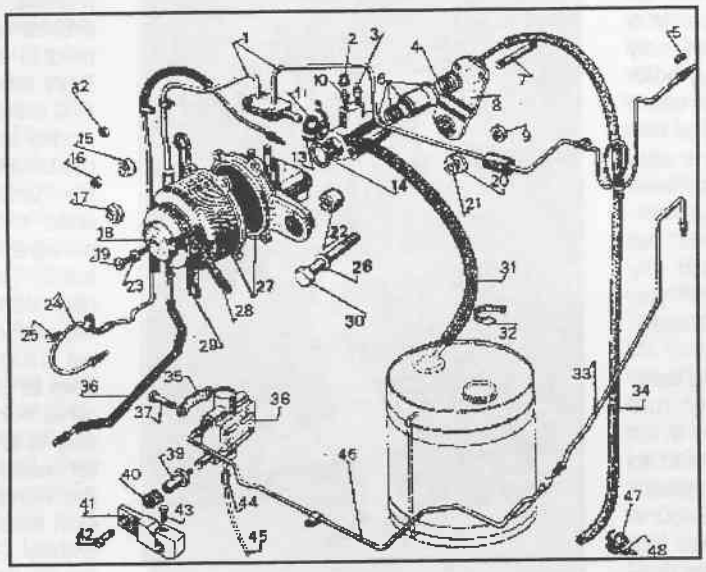

4. Adjust the accelerated idling speed.
With the engine idling, unscrew the large accelerated idling screw (previously screwed in fully) to achieve about 900 rpm. Depress the footbrake and the idle should reduce to the previously set 650 rpm, there should thus be about 250 rpm difference between the two.
5. Adjust the centrifugal regulator.
This is located above the high-pressure pump, and is belt-driven; the belt must not be overtightened or this will cause premature bearing failure, (In case of belt breakage, the car can be driven using the auxiliary clutch control lever) When the footbrake is released, allowing the idling speed to increase from 650 to 900 rpm, the centrifugal regulator releases just enough fluid from the clutch slave cylinder to allow the clutch to begin to engage. The car then begins to `creep' slowly in first or reverse gear; if not, the regulator needs adjusting. The adjustment is an 8mm bolt which passes through the regulator pulley and has an 8mm locknut. Release the locknut and unscrew the bolt one turn; lock the nut and check the creep speed. Continue this procedure until the car is set to creep at a speed that suits you. Anti-clockwise adjustment increases creep: clockwise reduces it, so if the car stalls when first gear is selected, screw the bolt in until you achieve the desired creep. Make only small adjustments of one turn or less at a time.
5. Adjust the clutch re-engagement control.
This is attached to the inlet manifold ahead of the carburettor primary throttle spindle; it serves to regulate the speed of clutch re-engagement between gear changes.
On the left-hand side of the unit a straight slotted screw protrudes approximately 8mm, sometimes surrounded by a collar with a projecting boss allowing 350 degree rotation. The boss contains a grub screw which allows the collar to be released and reset if more than a single turn of adjustment is necessary. If the speed of clutch re-engagement between gears is too slow, turn the screw in; conversely, unscrew it to slow down re-engagement. The screw may need several turns adjustment after clutch replacement; it will not unscrew and fall out. Finally, reposition the collar with the boss vertical to allow the maximum fine adjustment in either direction. This setting may he altered to suit your own driving style - road-test to check this. Although this completes the normal sequence of adjustments. there are a couple of further settings possible on a semi-automatic car; these are not normally relevant, but I will explain them next month for completeness. Also, for those of you with Efi cars, the semi-automatic setting procedure is fundamentally similar hut has certain obvious differences due to some fool having absconded with the carburettor-so I will cover this also!
Nigel Wild

Thanks to Nigel and the Citroenian, September 2000

the SERVICEABLE D part 4

Following the (cumulative) 3,000 and 6,000 mile servicing tasks previously described (in previous issues of Front Drive.), the following should be carried out in addition every 12,000 miles. conventionally regarded as annually. As before.

Remember that if the car has an unknown service history, you should aim to work through all service items as soon as reasonably practicable, to provide a basis for future servicing.

Every 12,000 miles:

Drain the gearbox oil and refill - this is best done after a run to warm up and circulate the oil. The nominal capacities are 3 1/2 pints/2 litres for the 4-speed or semi-automatic transmission, 4 pints/2.5 litres for the 5-speed gearbox. The main drain plug is below the differential, but the 5-speed box has an additional drain plug on the fifth-speed casing mounted on the front of the main box. Access is as for checking the level in the 6,000 mile service; the gearbox should he refilled using the combined filler and level plug until oil exudes from this.

Tappet adjustment is in one respect somewhat contentious - it is recommended at this interval, but has often been suggested to be carried out only when audibly necessary. The weakness in this argument is that valve clearances may either increase - due to wear and tear - or reduce - due to valve or seat recession - and the latter case quietens the engine. Too much clearance tends merely to generate excessive noise; insufficient clearance may result in burnt valves, necessitating cylinder head removal.

Although it now appears that the D series engine has valves and seats of adequate hardness to withstand the absence of lead as a lubricant - as previously discussed in the `Taking the Lead' series, engines never designed to run on unleaded petrol are potentially at greater risk than in the past. Correct valve clearances thus assume greater importance, both to prevent burnt valves, and as a check for unexpected wear.

Returning to the tappets. the method of adjustment is (surprisingly) conventional; remove the alloy rocker cover, being careful not to lose the seals for the spark plug tubes - these sometimes stick to the underside of the cover. You may need to use a hammer and wooden block to gently jar the cover free if it sticks. Do not forget to disconnect the battery earth lead first. The clearances (adjusted when cold) are:

Inlet—0.15mm/0.OO6in

Exhaust - 0.20mm/0.OO8in

The order of adjustment is:

Valve fully open. Adjust valve rockers

Exhaust	Inlet	Exhaust
1	3	4
3	4	2
4	2	1
2	1	3

No. I cylinder is nearest the front of the car. There is a variety of methods for rotating the engine in order to set the tappets: for a manual gearbox car, jack up one front wheel - car chocked, handbrake off - and engage top gear;

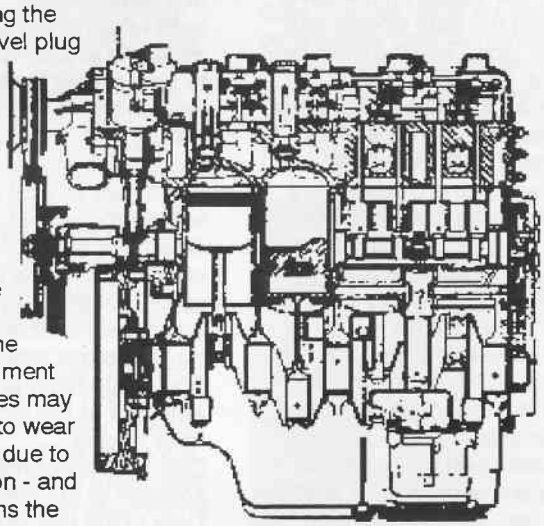

but for semi-automatic cars, the starting handle extension must be used. Release the pressure in the clutch slave cylinder by moving the auxiliary clutch control lever (beneath the dashboard instrument binnacle) forwards and pressing upwards to lock it. Do not forget to reset it later! The starting-handle extension comprises the hexagonal steel rod clipped transversely beneath the spare wheel, and a combined wheelbrace and crank handle.

The catch is that you will have to pivot the number plate out of the way in order to gain access to the hole behind it. The long rod must be guided through the various layers of air ducting until it engages positively in the starter dog on the nose of the gearbox. If duct misalignment prevents this, remove it (which is necessary for the gear oil check/change in any case). If you have one of the rare fully-automatic Borg-Warner transmission Ds, you should use a 6 volt battery to rotate the engine - yes, that is the official method! but in no case should you be tempted to use the camshaft pulley nut.

Grease the rocker cover gasket lightly before refitting it to the cover - having checked carefully for damage and dirt in the groove - and tighten the securing bolts to 0.75m/kg or 5 1/2 lbs ft, ie. not a lot, so do not over tighten!

The air filter element should be washed out in petrol, and then dipped in clean engine oil and allowed to drain before refitting. Ensure that most of the oil has drained out, otherwise the surplus will inevitably collect in the base of the air-filter body, ready to liberally lubricate the exhaust manifold or right-hand brake caliper (via some carefully placed small holes in the underside of the intake horn) when you brake!

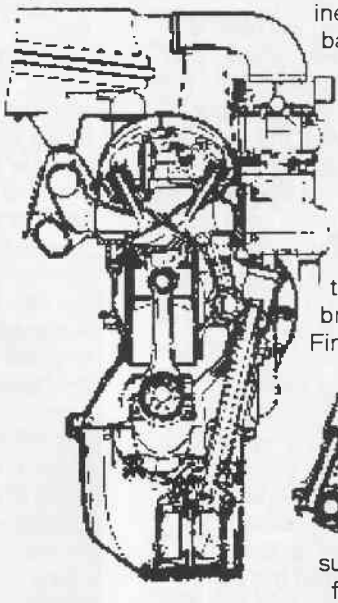

Finally, three jobs to prove that you are an advanced mechanic! Clean the carburetor fuel filter - the large brass bolt-head near the fuel supply pipe - by carefully washing the gauze in petrol; it may look clean to start with. Lubricate the air-horn compressor - beside the spare wheel - with a few drops of engine oil, and oil the felt washers on the battery terminal posts. Gain bonus points for being a true purist if these have survived!

The next installment will deal with the 18,000 mile service, and miscellaneous data; meanwhile, I will leave you with a question - which is rarer, an automatic DS or a 6-volt car battery ?

Citroenthusiastically.

NIGEL WILD

Thanks to The Citroenian, November 2000

The Serviceable D Part 6

The final service interval is at 18,000 miles; the mathematicians amongst you will realize that the most major service possible on a D occurs every 36,000 miles, when all the servicing intervals coincide! Taken on its own, there are but a few tasks; nevertheless, you will not complain of boredom...

Every 18,000 miles:

Renew the fuel filter on fuel-injected cars–this is located behind the right hand sill cover panels, and is a non-serviceable plastic box; the Bosch replacement should be fitted with the arrows on it facing forwards.

Parking brake adjustment may be carried out from underneath the car. Having carefully chocked the rear wheels and supported the front of the car to allow sufficient access, remove the unpainted steel undertray to permit access to the underside of both calipers. Ensure that the parking brake is fully released. The parking brake pads are located to the rear of the discs and there is an adjuster for each individual pad. Each has a locknut and adjuster bolt–on earlier cars these were 16mm and 14mm (in which case the 16mm spanner used may need to be ground thinner it to fit the inner pad locknuts as these are very close to the gearbox casing); on later cars both are 14mm.

Release the locknut, insert a 0.1mm (0.004in) shim steel strip between the head of the adjuster and the back of the pad, and adjust the bolt until the shim is just 'nipped'. The shim should be about 1 inch by 3 inches; it is pointless attempting to measure between pad and disc because of the grooves almost invariably worn in both! It helps if there is sufficient friction material left on the pads before adjusting them–the slotted finger on each pad (pointing downwards) serves as a wear indicator, often touching the disc when the pads are worn out. Replacement is a lengthy job, so do not skimp on regular maintenance to ensure optimum pad life!

It is well worth checking that the levers on the calipers actually come back as far as possible when released; it is more than likely that some crafty servicer has previously 'adjusted' the handbrake by adjusting the cables! This should never be done–it greatly reduces the leverage efficiency, to no ultimate advantage. The cable adjustments are purely presets to take up slack–not apply tension!

Finally, on refitting the undertray (after cleaning it and retrieving all the 'missing' components/tools) ensure that the foam rubber pad is in place against the hydraulic pipes to prevent chafing.

Drain and refill the hydraulic system. This is not as forbidding as you might imagine; it just requires care. With the engine off–preferably after a long run to get the fluid as warm as possible–set the manual height control to low and allow the car to settle completely. It is useful to the rear wheels resting on blocks–or even ramps–to ease access to the rear suspension boots. Release the bleed screw on the main pressure regulator (below the l/h front suspension sphere)–about quarter turn. Note that on EFI cars the regulator is mounted on the l/h side of the gearbox and the air duct must be removed to gain access (see 6,000 mile service).

Actuate the steering until it becomes very heavy; operate the brake button until it feels slack. Squeeze each of the rear suspension boots firmly but slowly (no smiles please!) until you feel the fluid has been evacuated; wait a few minutes to allow all the fluid to return to the reservoir. Drain the reservoir by unclipping the tube from its from its side, removing the end cap from the tube and using an extension tube to drain off the contents (about 10 pints). Keep the fluid away from the brakes! Set this up and allow to drain (lunch break?) You will then discover in the bottom of the reservoir a quantity of unspeakable black residue which must be removed; this can only be done with syringe, patience and finally a non-fluffy cloth, until the bottom is scrupulously clean. Anything left only contaminates your expensive new LHM! Clean the filter (see 6,000 mile service).

Refill the reservoir and start the engine; a loud 'clattering' noise emanating from the high-pressure pump indicates that it is cavitating, i.e. sucking air–prime the system by simply removing the pick-up pipe from the main reservoir, inserting it and pouring some fluid into it. When the pump starts to draw fluid, quickly plunge the pipe into the reservoir and clip in place.

You may have to bleed the system at the regulator bleed screw (i. e. loosen–wait briefly–retighten gently) several times to remove air if the car will not 'lift' after the fluid change. Once it does, remember to check that the fluid level is between the MIN and MAX marks with the suspension in the high position. This completes the fluid change and the system bleeding; brake bleeding is a separate operation, which I will hold over until the next installment, amongst other miscellaneous service items.

The final part of the service is to adjust the rear brakes–you may not believe this, but they are entirely conventional! Use a hexagonal socket or ring spanner (in preference to bihexagonal) to avoid 'rounding off' the adjusters–these are often very stiff. It is worth removing the drums (two countersunk Phillips screws) having backed–off the adjusters (move spanner upwards) to check both lining and cylinder condition. Free off and lubricate the adjusters; set these 'in' until you refit the drum. This operation is carried out so infrequently that it as well to be certain that your work is having the desired effect; D series rear brakes tend to 'stick' due to lack of serious use (put ½ ton in the boot). Incidentally, the brake linings are meant to be short in relation to the shoes, which differ in width between saloon and Safari, the later being the wider.

Citroënthusiastically
Nigel Wild

Reprinted from the Citroënian, December 2000

The Serviceable D Part 7
BLEEDING THE BRAKES

Just because the previous articles have covered the strictly time and mileage-based service items, this does not let you off that easily! Certain jobs are carried out only as required. and I will deal with these from now on.

Bleeding the brakes. Firstly the order of words in the title is correct - there is no reason to be alarmed by the prospect of this job!

Common indications of the need to bleed the brakes include 'burbling' in the pedal valve (due to the passage of bubbles) or brake delay – the absence of initial response followed by increased foot pressure and a close view of the dashboard.

The work will also be required, of course, after replacement of any brake components other than pads and shoes.

Brake bleeding is distinct from bleeding the system as described last month; it is a relatively simple procedure although you will need an assistant (no previous technical knowledge necessary: understanding of spoken Anglo-Citroen essential).

First, locate the front brake bleed screws, whose location differs between models. On manual gearchange cars they are located on the main brake calipers. On semi automatic cars the right hand brake bleed screw is located on the centrifugal regulator unit (above the hydraulic pump) and is the rearmost bleed-screw. The left hand brake is bled via the supplementary air valve on the carburettor: the bleed-screw is angled upwards towards the coil. On EFI cars both brakes are bled via the right-hand bleed screw, except in the case of pre-October 1970 cars where the left-hand brake bleed screw is located on the supplementary air device, on the left-hand side of the engine approximately under number two injector.

In all cases the right hand calliper should be bled first where applicable. Do not bleed the system under pressure! This is to prevent the formation of small bubbles in the fluid which could eventually produce air pockets in the system.

Incidentally, as you were wondering where the air apparently already in the system came from, it is more likely to be nitrogen gas which has passed through sphere diaphragms by molecular diffusion, which occurs naturally on any sphere from new. During bleeding, you do use the hydraulic pump to circulate the fluid, but the system is depressurized where relevant at the time.

So, having chocked both front wheels, release the pressure at the main regulator, with the engine switched off.

Attach a plastic tube, long enough to reach the main fluid reservoir, to the RH calliper bleed-screw. (Check the function of all bleed screws with the brakes off first - use a box spanner if possible to avoid the risk of damage to the bleed-screws which may be initially tight).

Induce your assistant to depress the brake button and hold it down while you open the bleed screw about 3/4 turn. There may be some fluid movement in the tube, but probably not much at this stage.

With the brake still depressed, ask your assistant to start the engine. Whilst watching the fluid movement in the tube, re-pressurize the system at the regulator. When any air has passed through and there is a steady flow of LHM, tighten the calliper bleed screw. Your assistant can now release the brake and switch off the engine.

Now depressurize the system again at the regulator, ready to repeat the procedure exactly for the LH calliper; leave the system pressurized when finished.

For the rear brakes, set the car at maximum height, with the engine idling throughout the operation. WARNING: maximum height is necessary to permit access while retaining weight on the wheels - THE CAR WILL BEGIN TO SINK AS THE BLEED SCREW IS RELEASED although it will rise again as soon as the screw is tightened. It is therefore essential to ensure that you can reach the bleed screw on each brake backplate without lying under the car, Safety supports to prevent the car sinking far are a necessary precaution.

Again, pre-check the bleed screws, because these do tend to seize; ideally, the dust-caps should still be present.

With a plastic tube attached to one bleed-screw and leading into a suitable container, ask your assistant to apply the brakes, with the engine running. Release the bleed screw; retighten as soon as the fluid is airfree.

Clean fluid may he returned to the reservoir: repeat the process for the other rear wheel. The fluid level in the reservoir must be sufficient at all times, and never below the 'MIN' mark even with the car at maximum height, or you may add more air than you have removed!

Check for leaks when finished. but do not over tighten any bleed-screws - they don't need it.

All the foregoing may seem rather forbidding but in practice the operations are logically sequential. Moreover, a return to predictable and progressive, as well as powerful braking will transform your car's driveability!

Nigel Wild

Thanks to The Citroenian, January 2001